Queen Mary
University of London
Science and Engineering

EBU4202: Digital Circuit Design
Memories Overview & Microcomputer

Dr. Md Hasanuzzaman Sagor (Hasan)
Dr. Chao Shu (Chao)
Dr. Farha Lakhani (Farha)
Dr. Fatma Benkhelifa (Fatma)

School of Electronic Engineering and Computer Science,
Queen Mary University of London,
London, United Kingdom.

Memory Devices

- Data Storage Devices
- Classification:
  - Serial Access (Disc, Tape)
  - Random Access (ICs)
- Volatile vs. non-volatile
- Read-Only vs. Read/Write

General Model

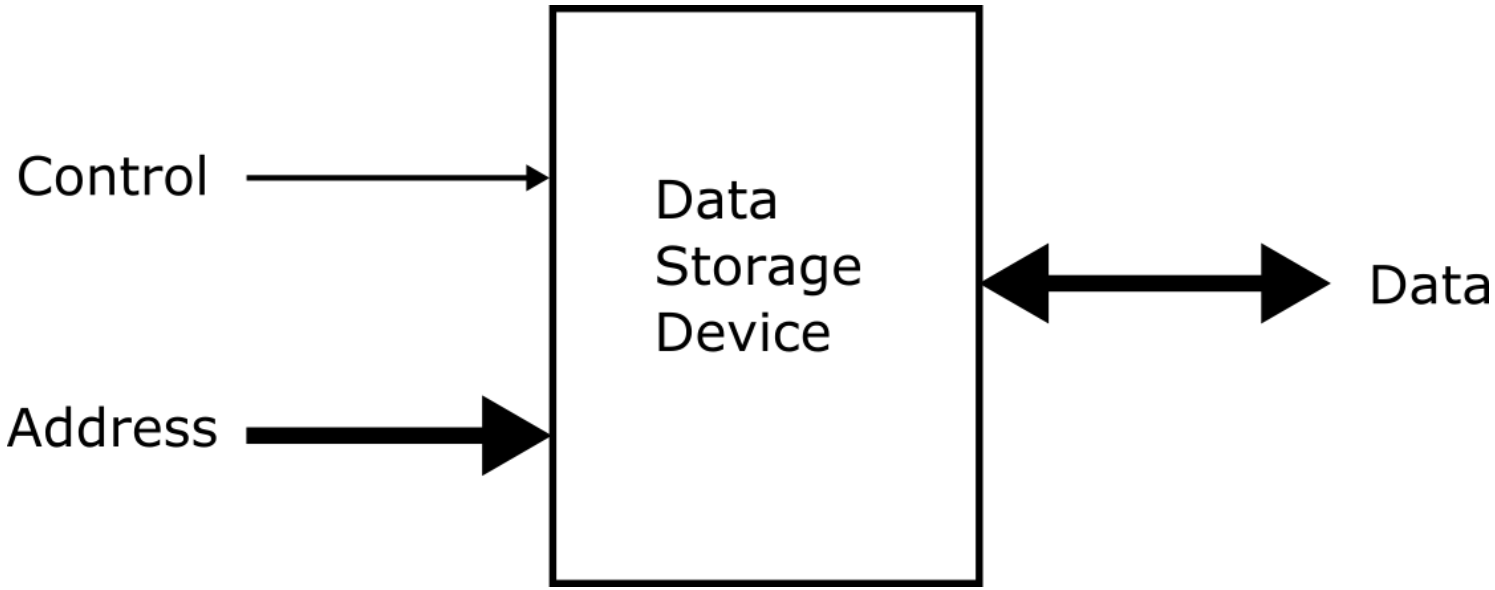

Serial Access

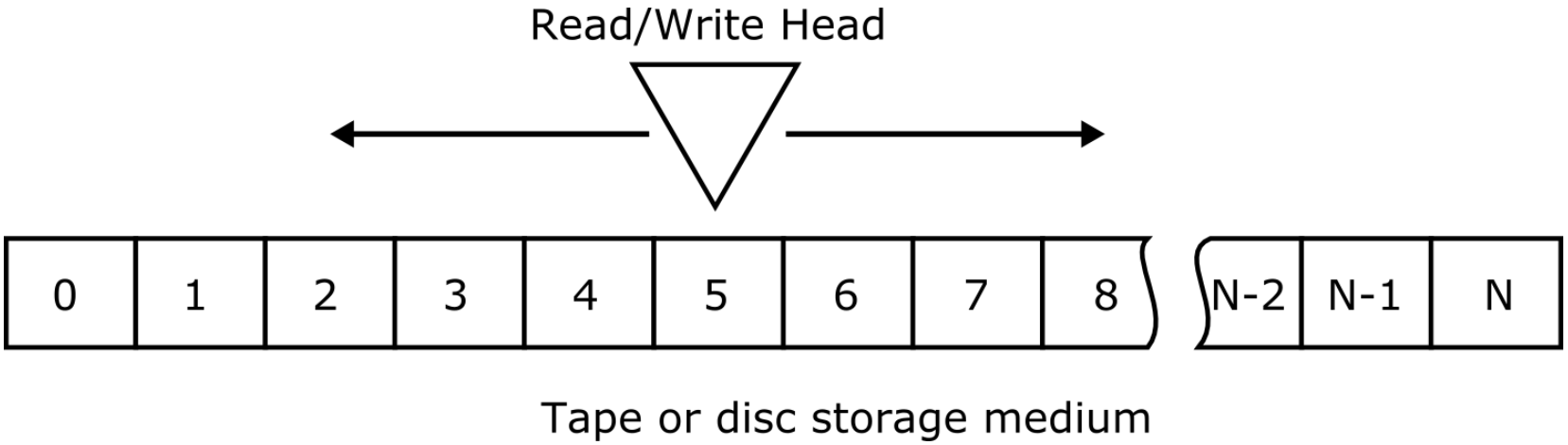

Stores data bits in series

Head must travel from current position to new address passing the other addresses in between – time consuming

Can store large amounts of data

Random Access

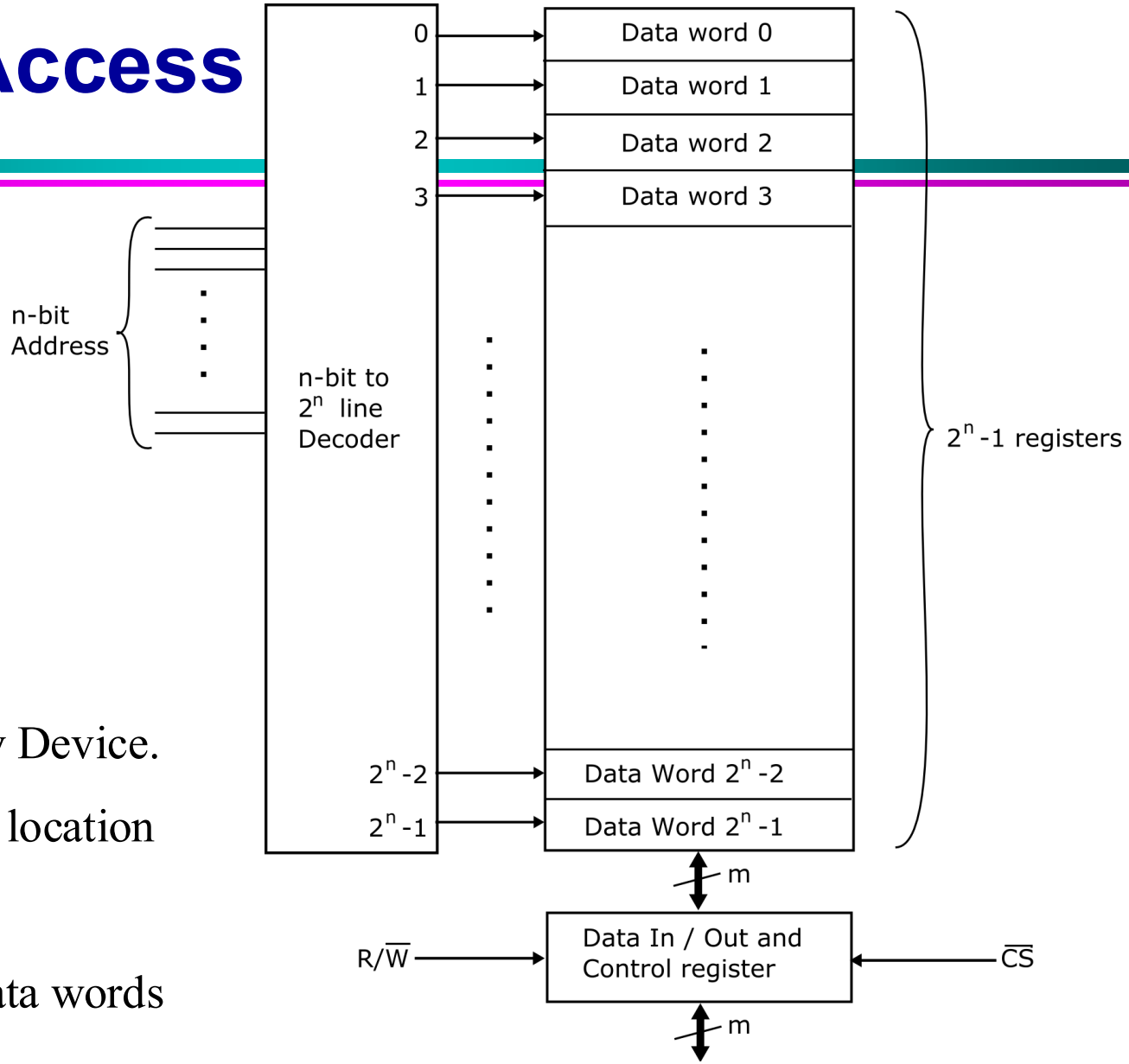

Random Access Memory Device.

Equal time to access any location

n-bit address

Device stores 2^n m-bit data words

Volatile/Non-volatile

- Volatile memory loses its contents when the power is switched off
- Non-volatile memory keeps its contents even if there is no power to the device
- Volatile memory is commonly called RAM. Often used as “working memory”
- Non-volatile memory is commonly called as ROM
- Both RAM and ROM are random-access

RAM (RWM): Random Access Memory

There are 2 types of RWM (RAM):

- **Static RAM (SRAM):** Uses transistors to store a single bit of information and does not need to be refreshed periodically.

- **Dynamic RAM (DRAM):** Uses a capacitor to store the data bit and needs to be periodically refreshed to maintain the charge in the capacitors.

RAM (RWM): Random Access Memory

SRAM:

- Uses bistable latching circuit to store data (perhaps 6 to 8 transistors).
- It is volatile (although a non-volatile version is available nvSRAM). Batteries internal to the computer can be used to maintain power when the main computer power is switched off.
- It is more expensive and less dense than DRAM. So it is not used for low cost, high capacity applications such as the main memory devices in personal computers.
- It uses little power at low speeds.

RAM (RWM): Random Access Memory

DRAM:

- Uses a capacitor and a single transistor for each bit.
- It is volatile and quickly loses its data when the power is
- removed.
- Because capacitors leak charge, DRAM has to be continually refreshed.
- It is slower than SRAM.
- Because of the small cell size, DRAM can have very high densities.
- It is the main memory in personal computers.

ROM: Read Only Memory

ROM:

- ROM is Read-Only Memory where the contents cannot be changed by normal CPU operations.
- They are used to store fixed data or information.
- The contents of ROM are usually set by manufacturer, but some types of ROM can be written to by the user (programmable)
- For example, PROM (Programmable ROM), which uses a special device called a PROM Programmer.

ROM: Read Only Memory

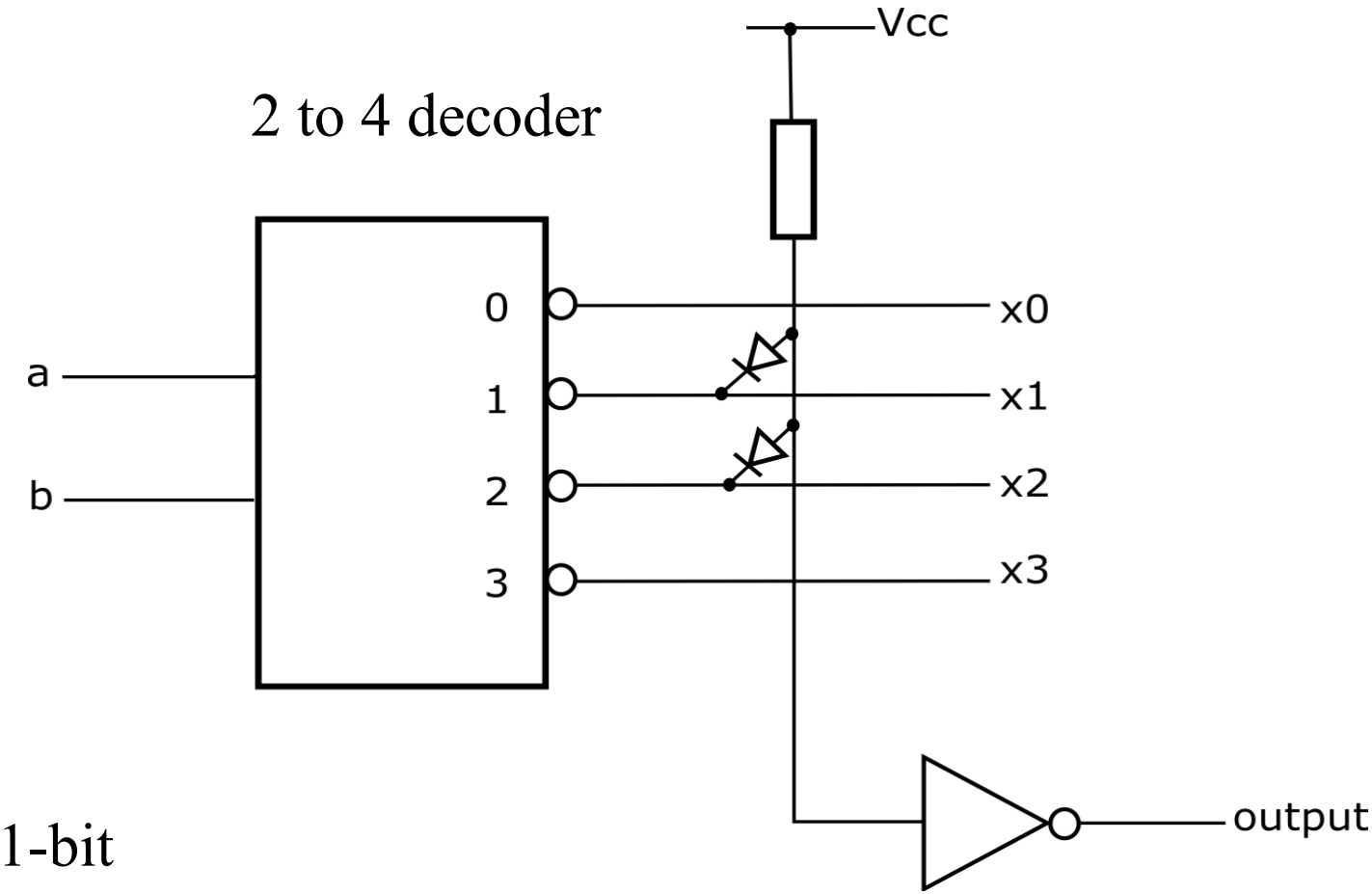

4 × 1-bit

ROM: Read Only Memory

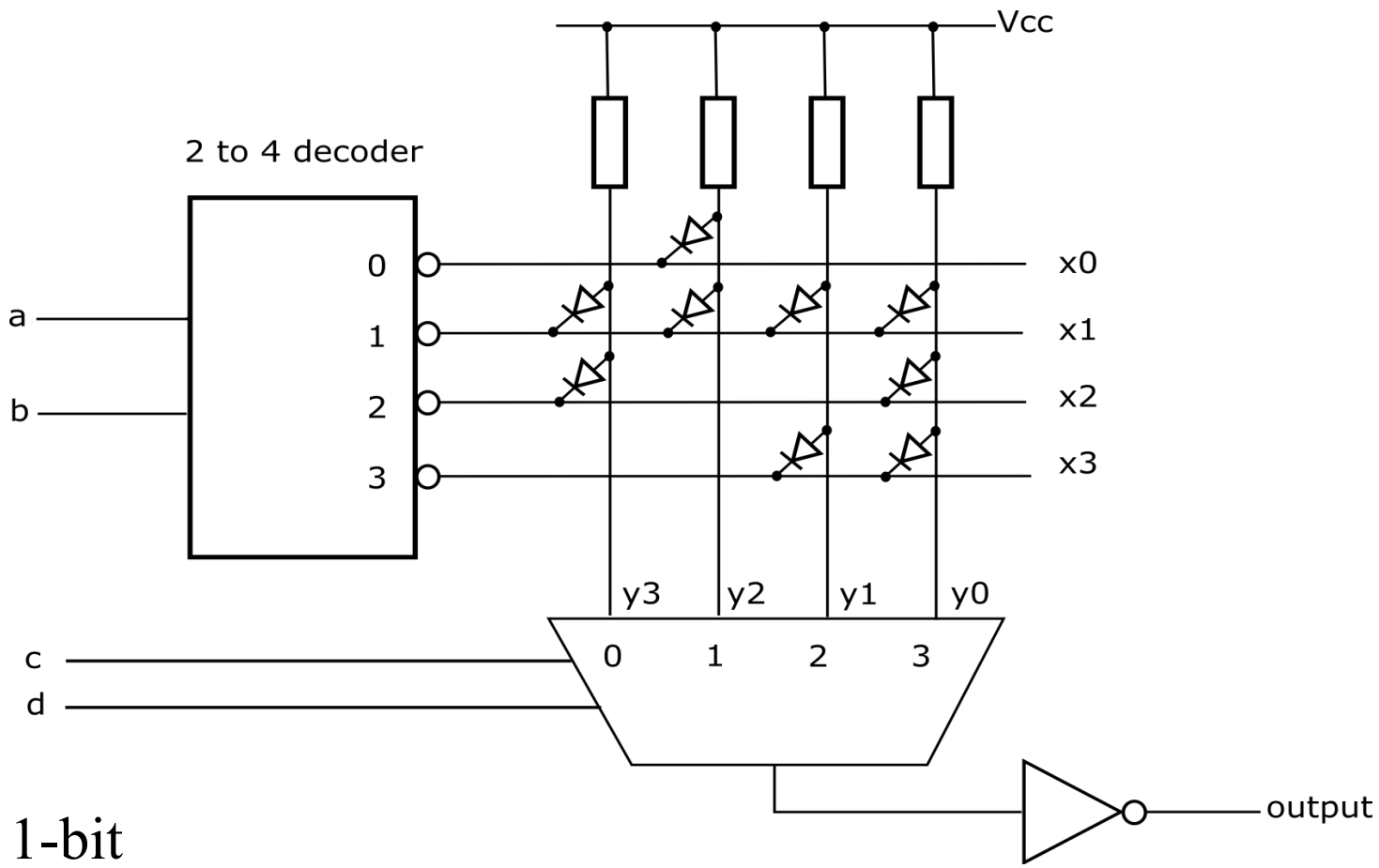

16 × 1-bit

ROM: Read Only Memory

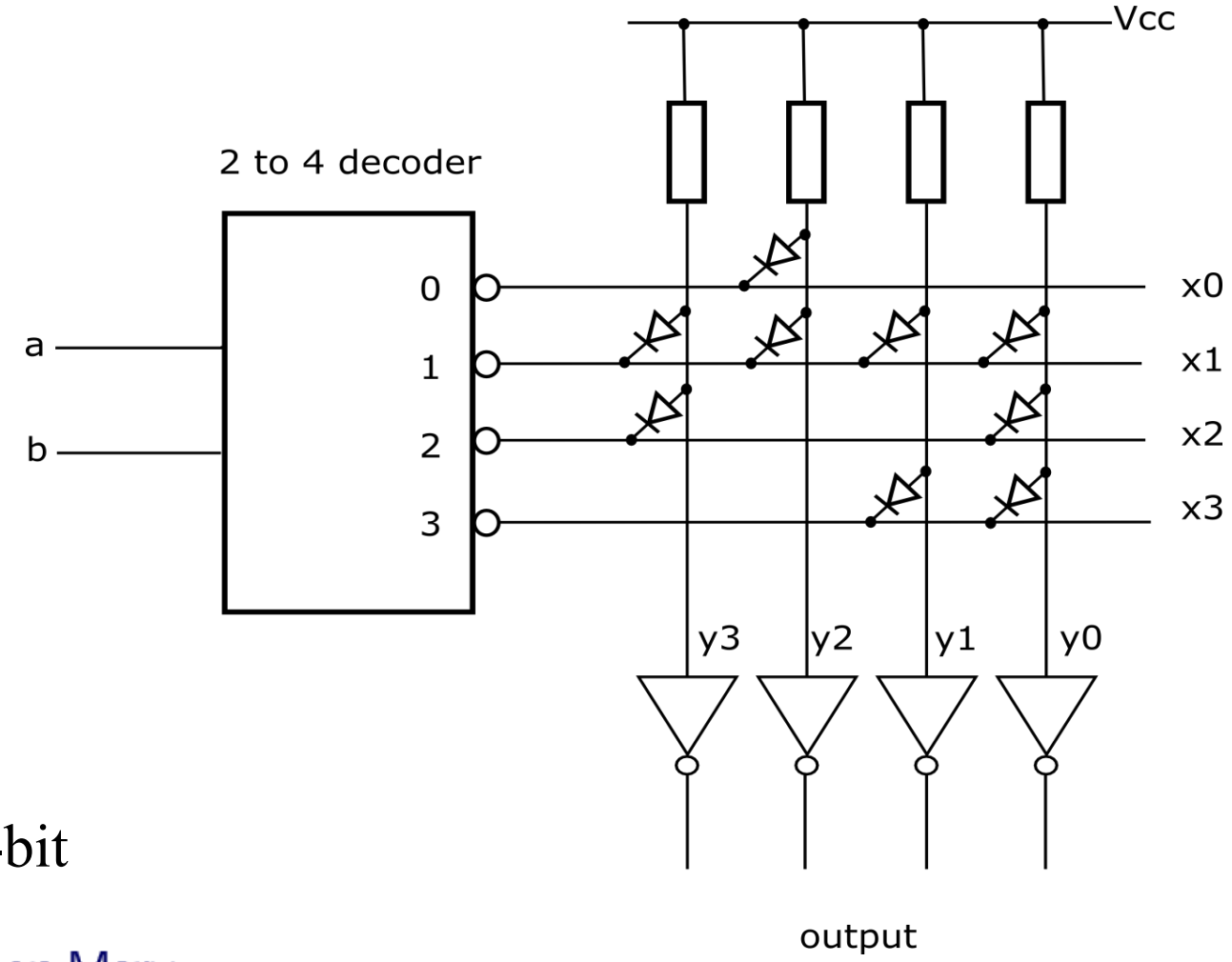

4×4-bit

ROM: Read Only Memory

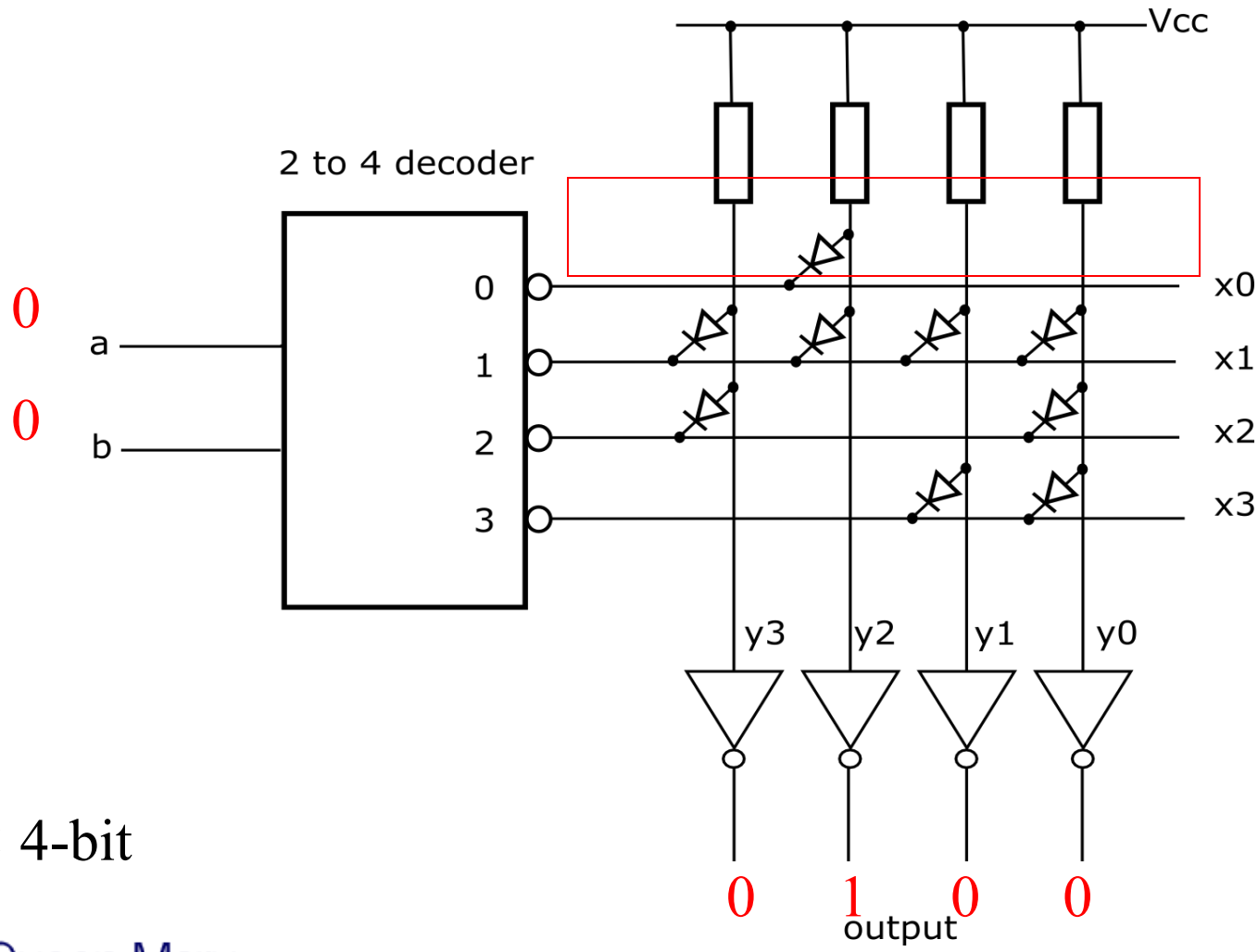

4 × 4-bit

ROM: Read Only Memory

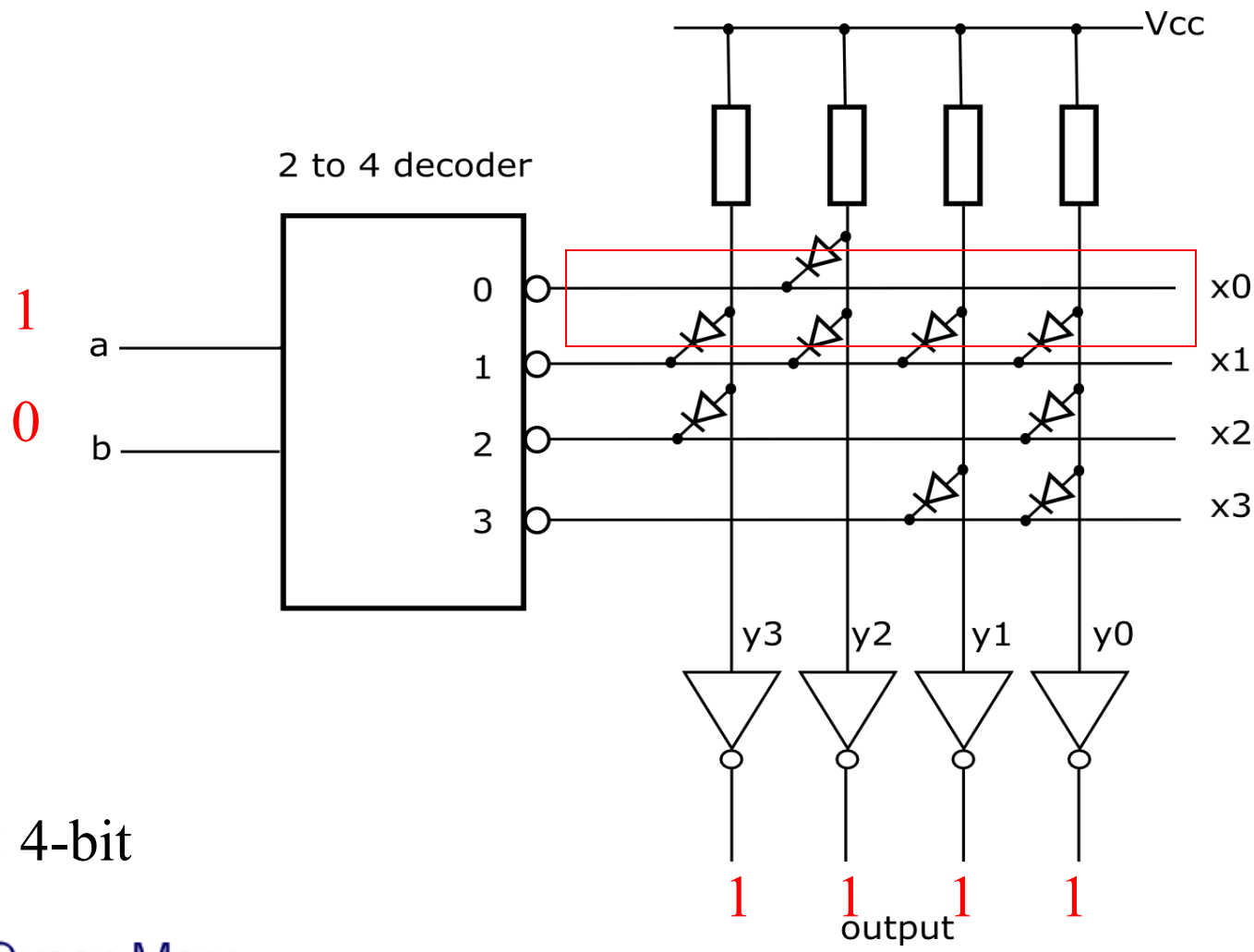

4 × 4-bit

ROM: Read Only Memory

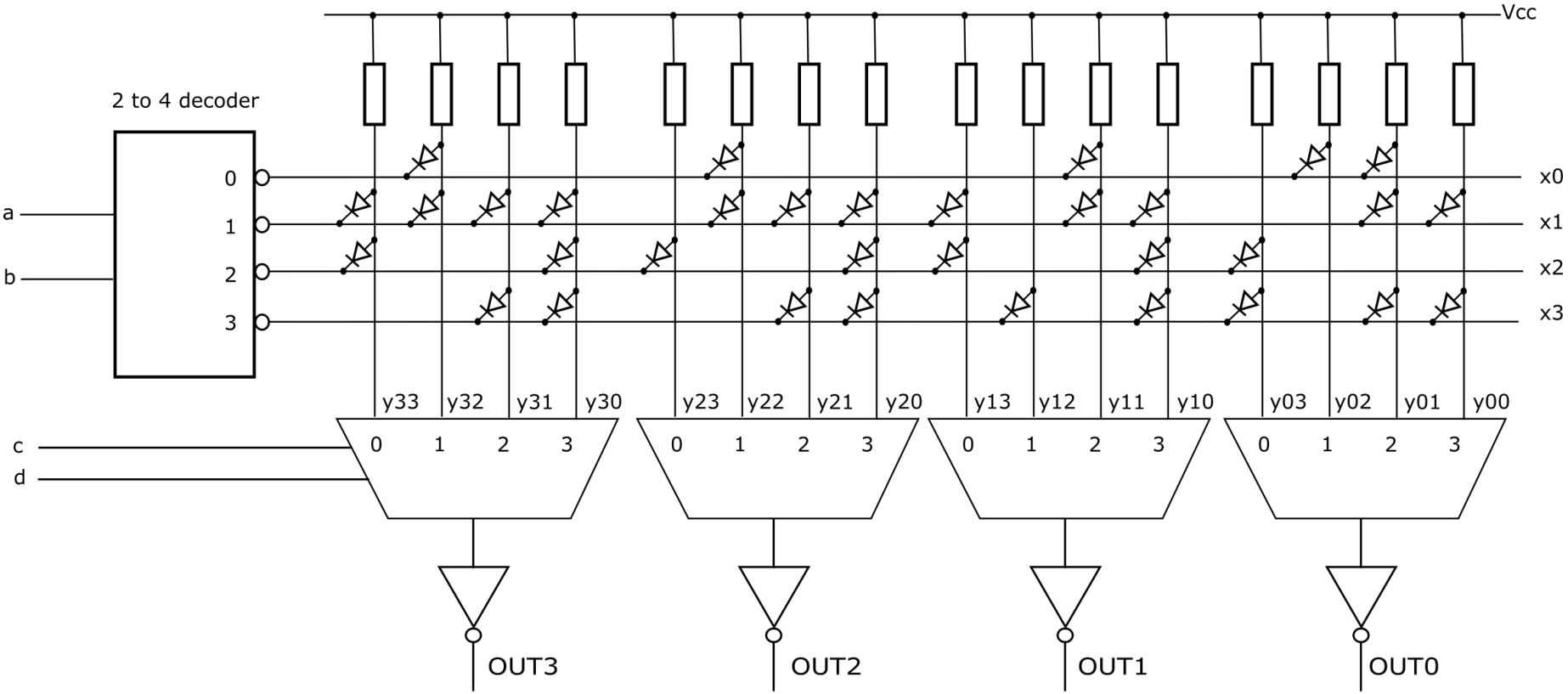

16 × 4-bit

ROM: Read Only Memory

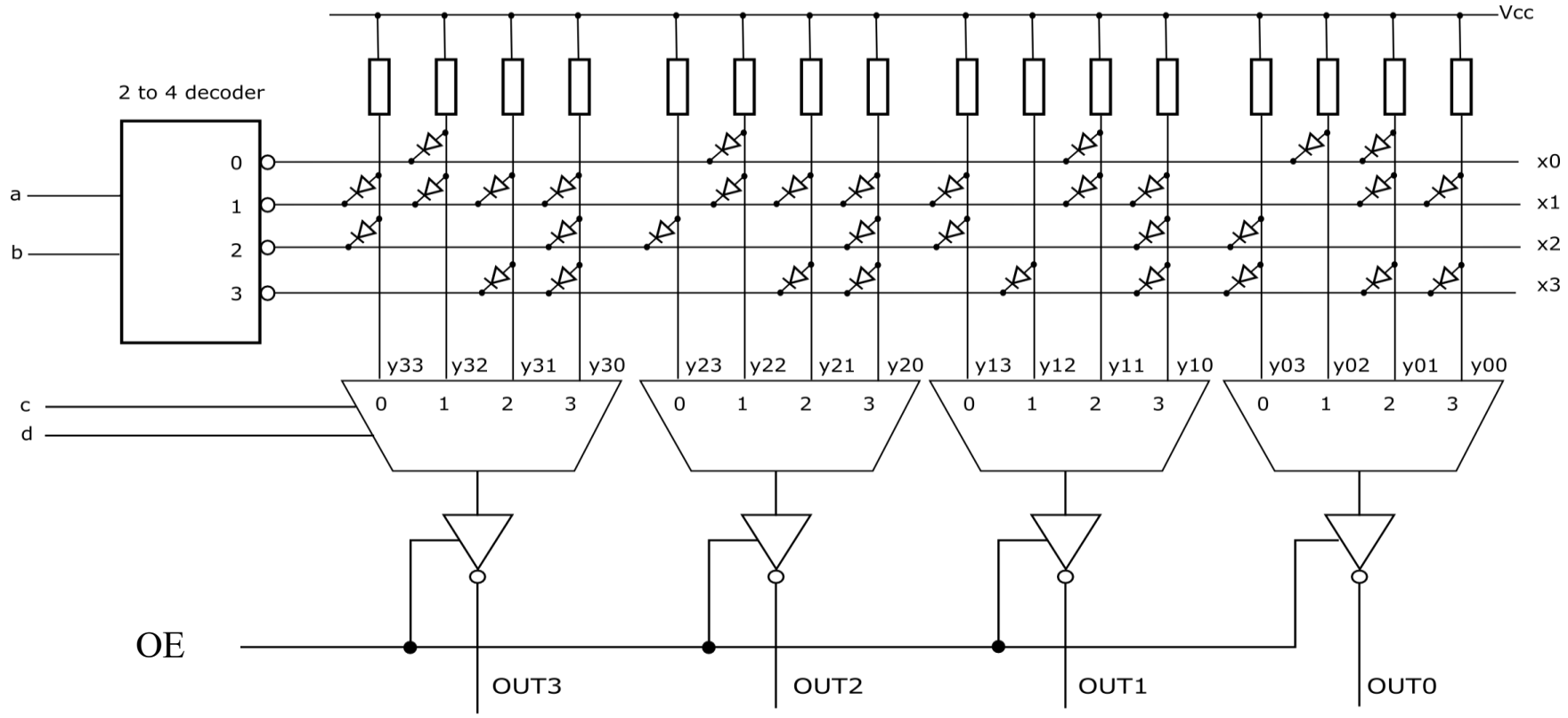

Tristate Outputs

enable output to be connected to a bus

ROM Technologies

- Mask ROM – programmed in manufacture
- PROM – Programmable ROM
- EPROM – Erasable PROM
- EEPROM – Electrically Erasable PROM

Memory Sizes

- Have dealt so far with very small memory sizes
- What about bigger memory devices?

Memory Sizes

- **Careful!**
- For memory sizes:

$$1k = 1024 = 2^{10}$$

- Not 1000 as with SI units

Term	Popular Usage	SI
Kilobyte (KB)	2^{10}	10^{3}
Megabyte (MB)	2^{20}	10^{6}
Gigabyte (GB)	2^{30}	10^{9}
Terabyte (TB)	2^{40}	10^{12}
Petabyte (PB)	2^{50}	10^{15}
Exabyte (EB)	2^{60}	10^{18}
Zettabyte (ZB)	2^{70}	10^{21}
Yottabyte (YB)	2^{80}	10^{24}

ROM Example Application

Provide next-state feedback and output for State Machine

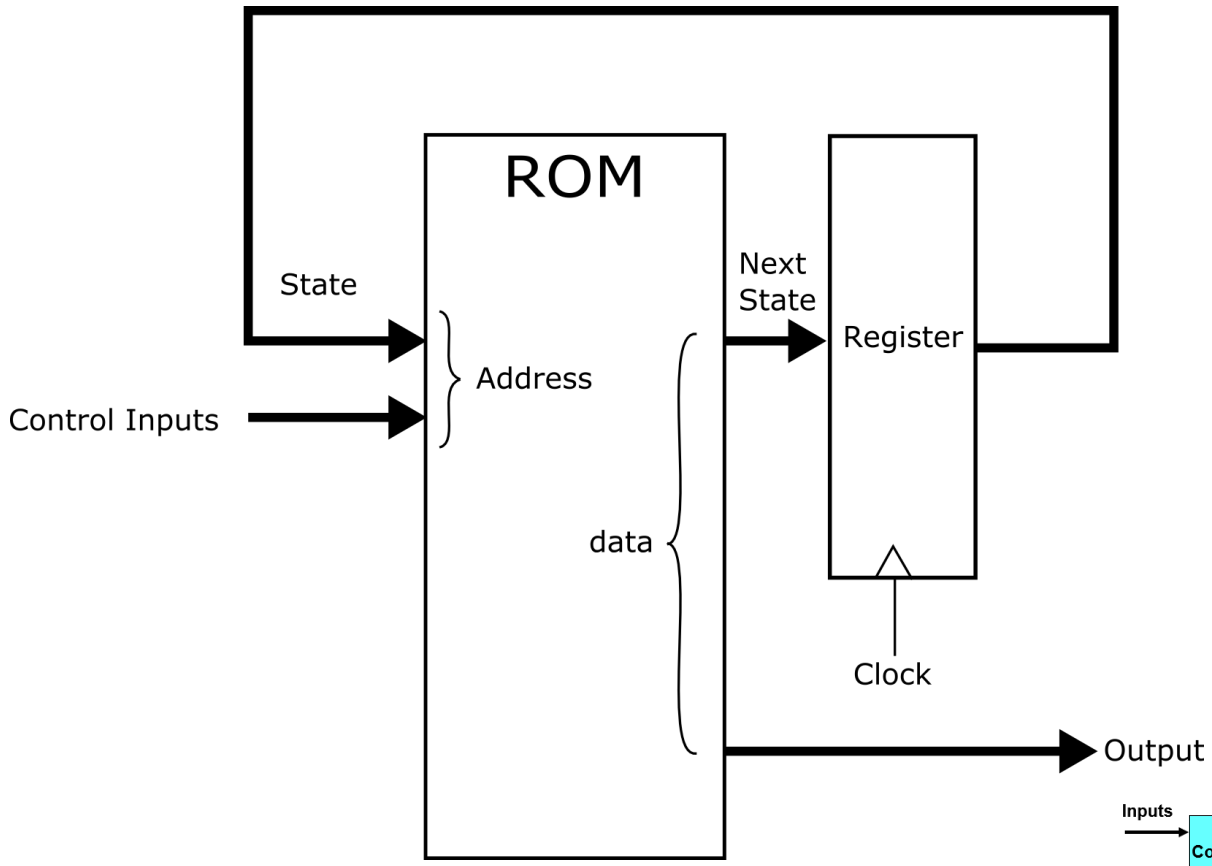

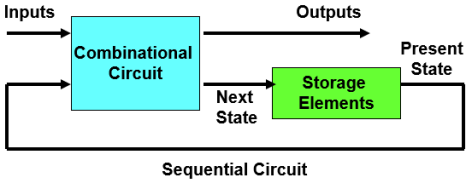

Microcomputer Block Diagram

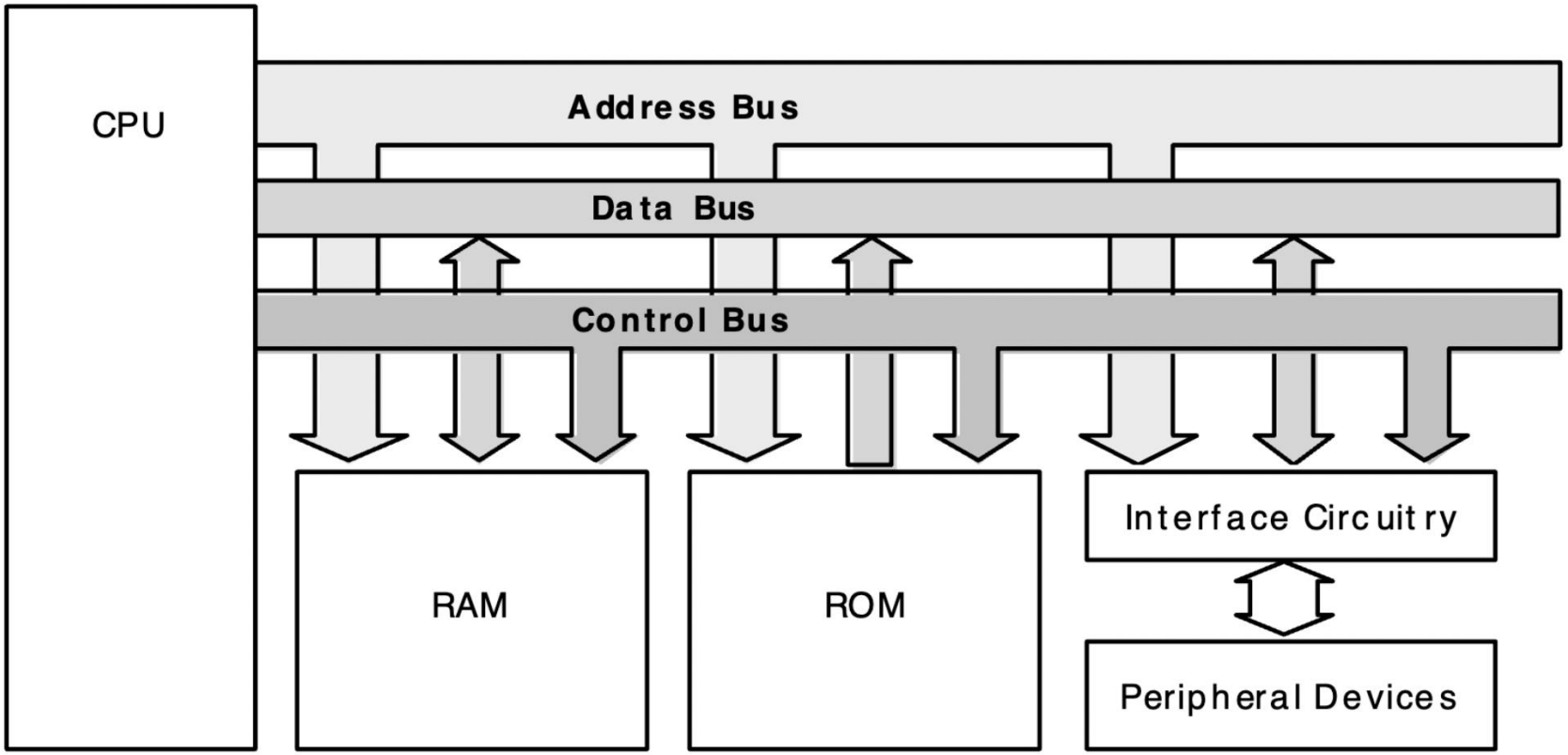

Microcomputer

- Examples of Control signals are:
    - Read/Write
    - Chip Select
    - Output Enable, etc.
- RAM can be a combination of volatile and non-volatile (SRAM/DRAM) as “working memory” and temporary storage.
- ROM is non-volatile, storing the operating system (e.g. Windows 10, iOS12, Linux, etc) and other permanent firmware.